SINK CARRIER

623-J

Hanger plate carrier with pipe uprights, welded base feet, fixture support hardware and bearing studs.

FIXTURE

Manufacturer JUST

Name SERVICE No. A-46712

Style SINK

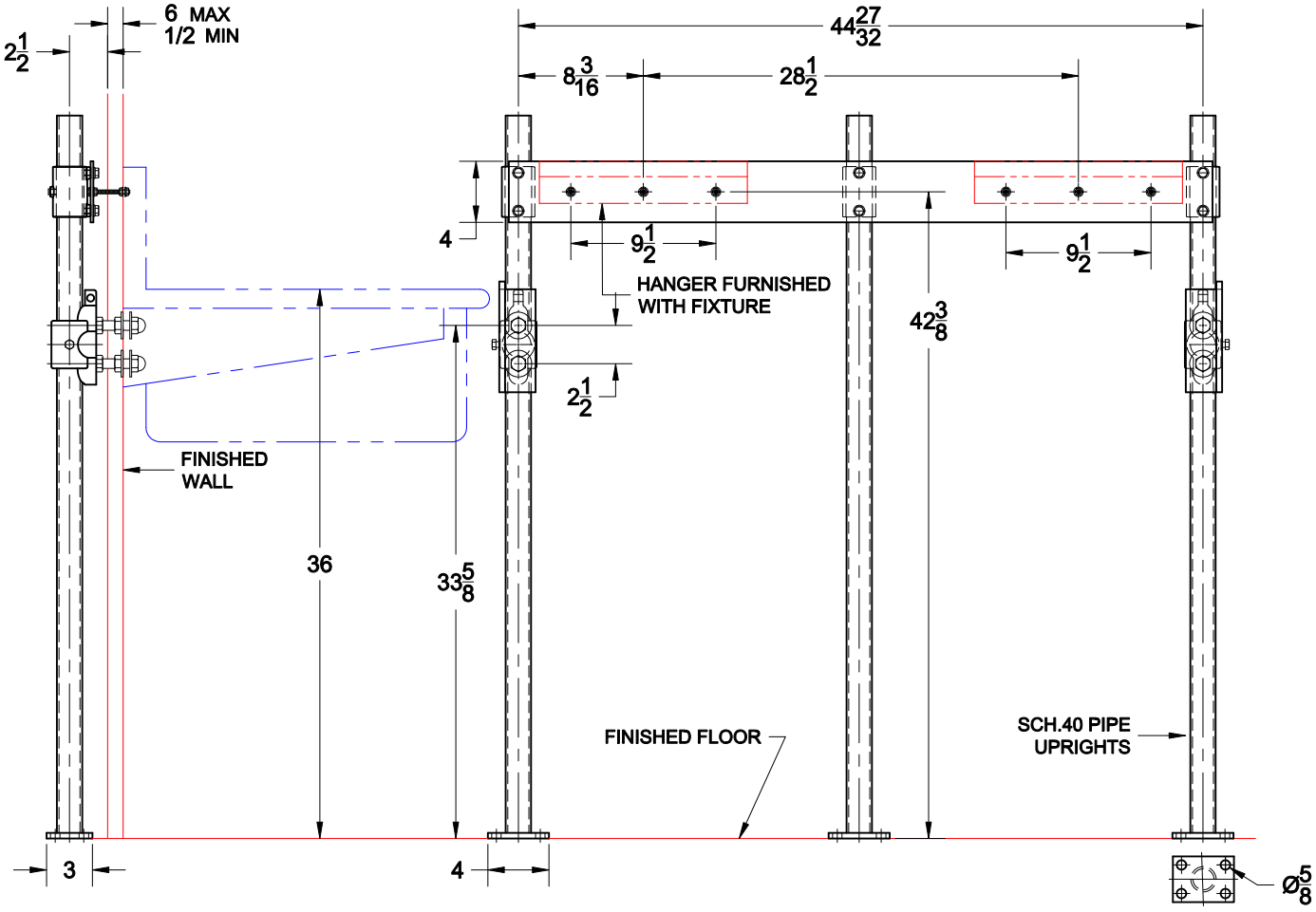

Cat. No.	Type	Wt. Lbs.
623-J	Single	74.0

OPTIONS

Suffix	Description
M36	Rectangular Steel Uprights

AutoCad.dwg