LAVATORY CARRIER

520-08

Concealed arm carrier with pipe uprights, welded base feet, leveling screws and lock devices.

FIXTURE

Manufacturer CRANE

Name HARWICH No. 1412V

Style 20 X 18 1412S

1412H

14122H

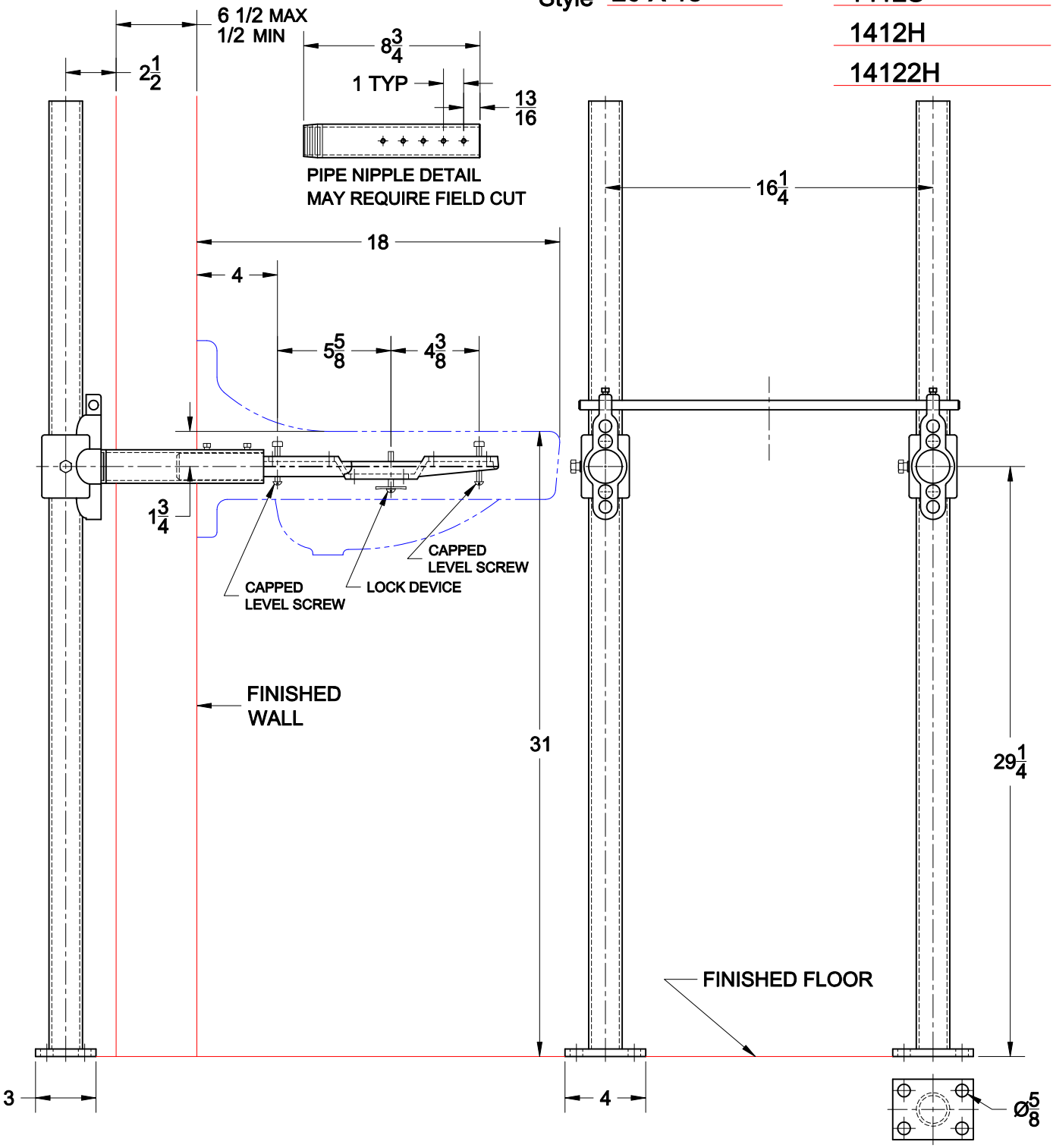

Cat. No.	Type	Wt. Lbs.
520-07	SGL	55.0

OPTIONS

Suffix	Description
M36	RECTANGULAR STEEL UPRIGHTS

AutoCad.dwg