Lavatory Carrier

520-08-M25

Concealed arm carrier with pipe uprights, leveling screws, lock device & welded base feet.

FIXTURE

Manufacturer TOTO

Name Commercial No. LT307

Style Lavatory

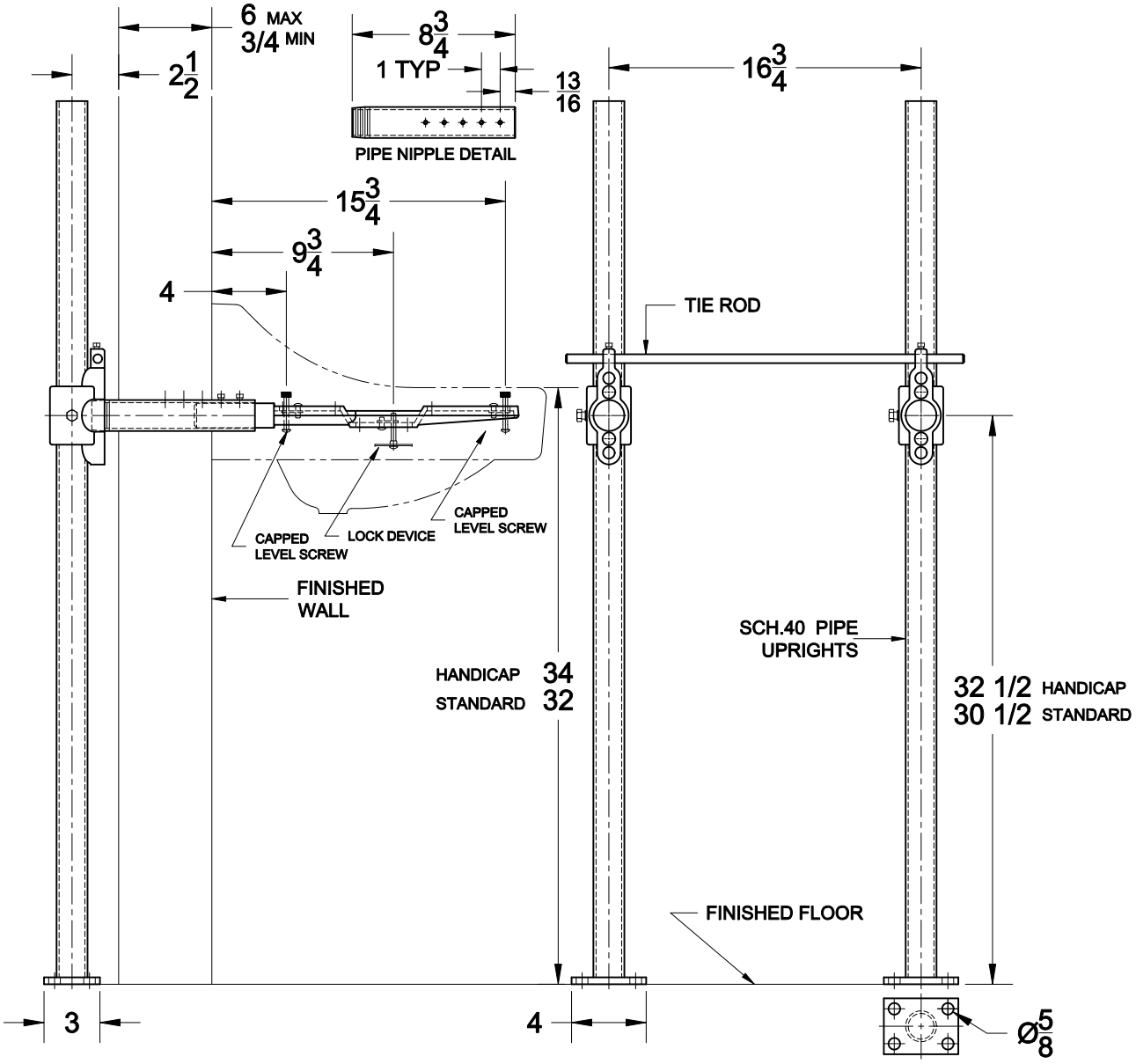

OPTIONS

Cat. No.	Type	Wt. Lbs.	Suffix	Description
520-08-M25	Single	36.0	M36	Rectangular Steel Uprights

AutoCad.dwg