630-AM11 Lavatory Carrier (Support Plate Style)

Regularly Furnished: Single Lavatory fixture support with painted cast iron header couplings, round tubular steel uprights, 7 gauge support plates, zinc plated support hardware and welded base feet.
ASME Type II Sink Carrier Load Rating

Steris Scrub Sink
617106-846

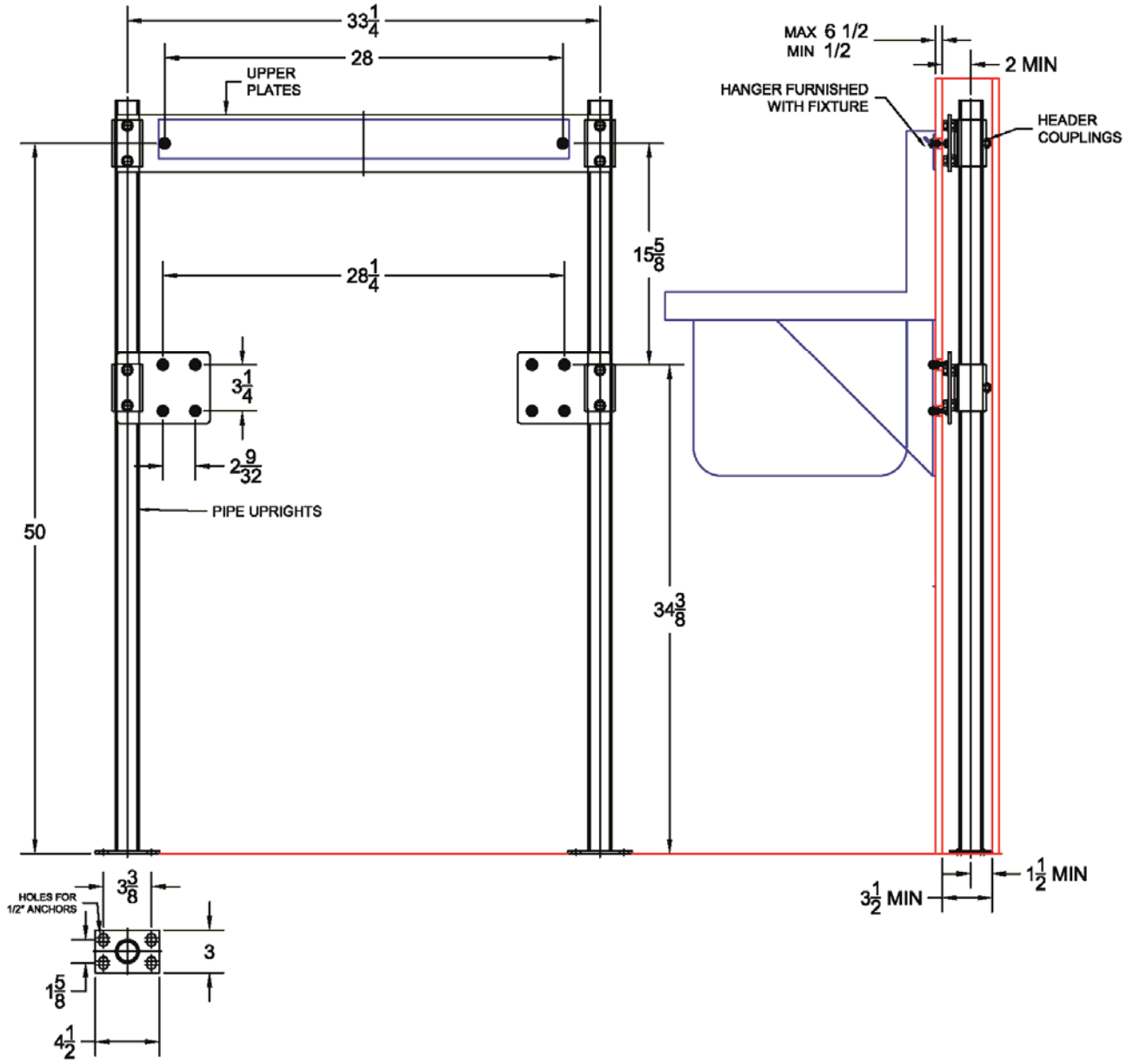

Model	Plate Package			Support Kit			Round Uprights		
	Qty	Part No.	UPC	Qty	Part No.	UPC	Qty	Part No.	UPC
630-AM11	1	WP613-H6A	613001	2	WP400-2R	544180	2	PU-1F	227410
	2	WP613-H6B	613002						